dewhurst

www.dewhurst.co.uk orders@dewhurst.co.uk +44 (0)2087 448 200

US90-15 Pushbutton

The square shaped US90-15 braille pushbutton meets all the requirements of the visually impaired. It is made up of four elements: switch body, illumination, pressel, and surround. This data sheet includes detailed information on each element and the options available for the US90-15 pushbutton.

The US90-15 has an embossed legend (character or symbol), providing clear identification. The legend and the halo (light created between the pressel and the surround) can be illuminated in a wide variety of colours.

Image shows US90-15 pushbutton with Compact 3 switch body, chrome surround, and brushed stainless steel pressel. Legend illuminated in blue.

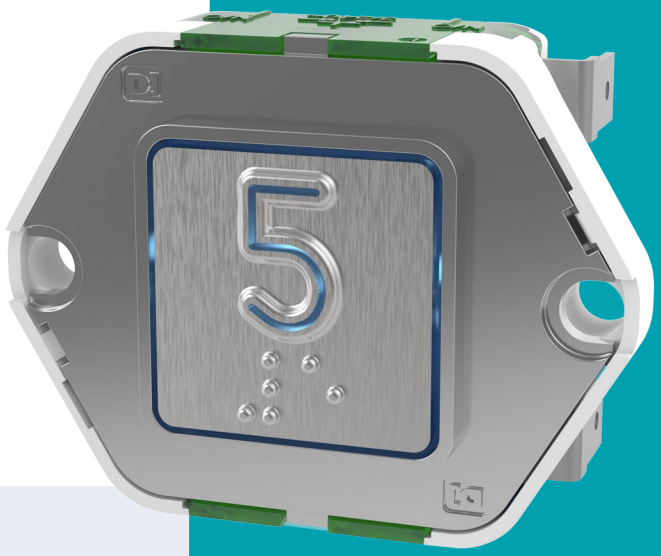

Switch body

The switch body is the functional part of the pushbutton. The US90-15 is available with Compact 3, Compact 3P and Compact 2 Micro switch bodies.

Pressel

The pressel is the faceplate of the pushbutton, and is available in a range of material finishes, including brushed stainless steel, mirror stainless steel, brushed brass and mirror brass. Standard US90-15 pressels are moulded with opal polycarbonate.

There is an extensive range of pressel legends to choose from. All legends are 15mm high embossed and tactile, with standard English braille dots.

Illumination

Single, dual, bicolour and bicolour+ LED illumination options are available for the US90-15. These illuminate both the legend and the halo. They are easily replaceable and available in blue, white, red, amber and green.

Surround

The surround is the element of the pushbutton which sits in front of the pressel and clicks into the switch body. US90-15 pushbutton surrounds are available in a wide variety of material, depth and colour.

Standard material finishes include clear plastic, chrome, brass, satin chrome, black and green.

Key features

- Extensive range of pressel legends to choose from with bespoke designs available on request.
- Legends are 15mm high embossed and tactile with braille.
- Legend and halo illumination.
- Vandal resistant - meets EN81-71 category 2.
- Standard pressels are a stainless steel plate moulded with opal polycarbonate.
- Similar style available in jumbo.
- Matching range including indicators, key switches and rocker switches.

Switch body | Compact 3 & Compact 3P

The switch body is the functional part of the pushbutton. Both the Compact 3 and 3P switch bodies offer the full range of illumination options as well as all possible contact configurations.

Dimensions

Front view

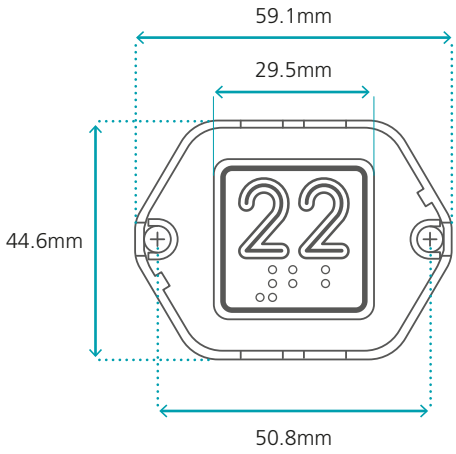

Compact 3

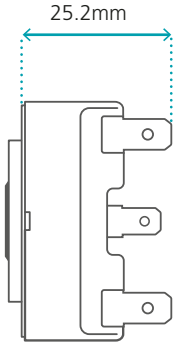

Compact 3P

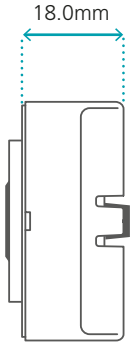

The compact 3P switch body is low profile

Technical details

Power (continuous)	2.5 watts (maximum)
Contact arrangements	2 Normally Open contacts
	2 Normally Closed contacts
	1 Normally Open contact and 1 Normally Closed contact

Environmental protection (IP rating)	EN60529 (IP54)
Vandal resistance	EN81-71 category 2
Code compliance	EN81-20

Dewhurst **Compact 3** & **Compact 3P** switch bodies are designed and tested to last

over **10 million operations**.

Cutouts & stud positions

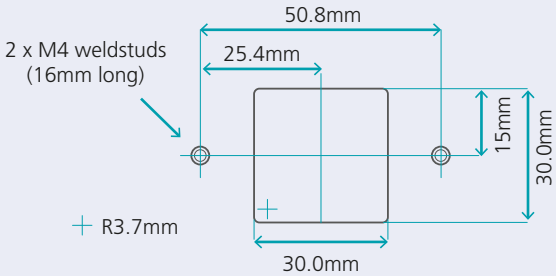

Pushbuttons with Compact 3 and Compact 3P switch bodies can be supplied loose or incorporated into stations. These have a vertical pitch of 50mm and a horizontal pitch of 60mm (Compact 3), or 80mm (Compact 3P), which means the switch body can be rotated 90 degrees.

If the pushbutton is supplied loose, spacers will be provided to accommodate the differing faceplate thickness.

Switch body | Compact 2 Micro

The switch body is the functional part of the pushbutton. The Compact 2 Micro switch body is available with one NO contact configuration. It also offers single, dual and bicolour illumination options.

Dimensions

Front view

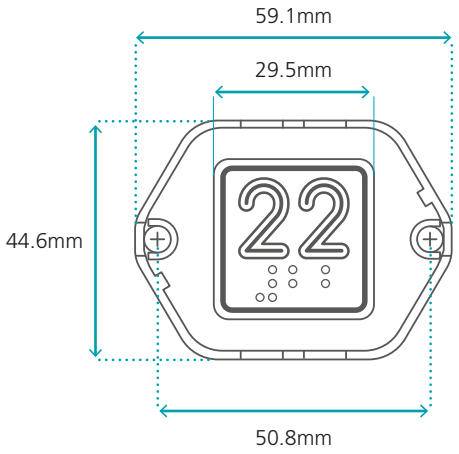

Compact 2 Micro

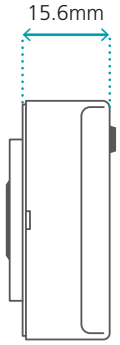

The compact 2 Micro switch body is low profile.

Technical details

Power (continuous)	2.5 watts (maximum)
Contact arrangement	1 Normally Open contact

Environmental protection (IP rating)	EN60529 (IP54)
Vandal resistance	EN81-71 category 2
Code compliance	EN81-20

Dewhurst **Compact 2 Micro** switch bodies are designed and tested to last

over **1 million operations**.

Cutouts & stud positions

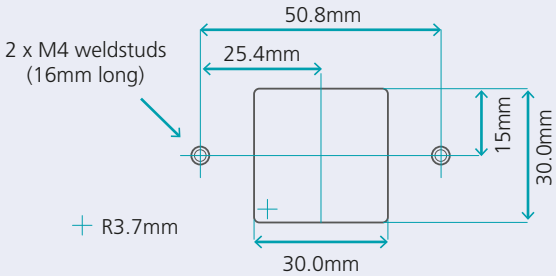

Pushbuttons with Compact 2 Micro switch body can be supplied loose or incorporated into stations. These have a vertical pitch of 50mm and a horizontal pitch of 60mm, which means the switch body can be rotated 90 degrees.

If the pushbutton is supplied loose, spacers will be provided to accommodate the differing faceplate thickness.

Illumination

There are a wide range of interchangeable and easily replaceable LED illumination options available for Dewhurst pushbuttons. All options illuminate both the legend (character or symbol) and the halo (light created between the pressel and the surround).

The US90-15 offers a choice of single, dual, bicolour and bicolour+ illumination, all of which are available with Compact 3 and Compact 3P switch bodies. The Compact 2 Micro switch body comes with single, dual or bicolour illumination.

LED colours are available in blue, white, red, amber and green.

Single illumination

Before call acceptance	After call acceptance
Both the legend and the halo are non-illuminated	The legend and halo are both illuminated at full brightness of any colour

Dual illumination

Before call acceptance	After call acceptance
Both the legend and the halo are illuminated at 10% of full brightness of any colour	The legend and halo are both illuminated at full brightness of the same colour

Bicolour illumination

Before call acceptance	After call acceptance
Both the legend and the halo are illuminated white at 10% of full brightness	The legend and halo are both illuminated at full brightness of any colour

Note: the initial white illumination before call acceptance is still visible after call acceptance. This may result in the chosen colour being slightly lighter than full brightness of other illumination options.

Bicolour+ illumination

Before call acceptance	After call acceptance
Both the legend and the halo are illuminated at full brightness of any initial colour	The legend and halo are both illuminated at full brightness of a different colour

Note: Bicolour+ illumination isn't available with the Compact 2 Micro switch body.

Technical details

LED current	20mA (typically)
LED voltage (±15%)	12V DC, 24V DC, 110V AC

Pressel

The pressel (the faceplate of the Dewhurst pushbutton) is available in a range of standard material finishes. There is an extensive range of pressel legends to choose from. All legends are 15mm high and tactile, with standard English braille dots below. Bespoke characters are available on request.

Material finishes

Brushed stainless steel

Mirror stainless steel

Brushed brass

Mirror brass

Standard US90-15 pressels are moulded with opal polycarbonate, but other colours are available on request.

Surround

The surround is the element of the pushbutton which sits in front of the pressel and clicks into the switch body. Dewhurst pushbutton surrounds are available in a wide variety of material, depth and colour.

Material finishes

Standard material finishes include clear plastic, chrome, brass, satin chrome, black and green.

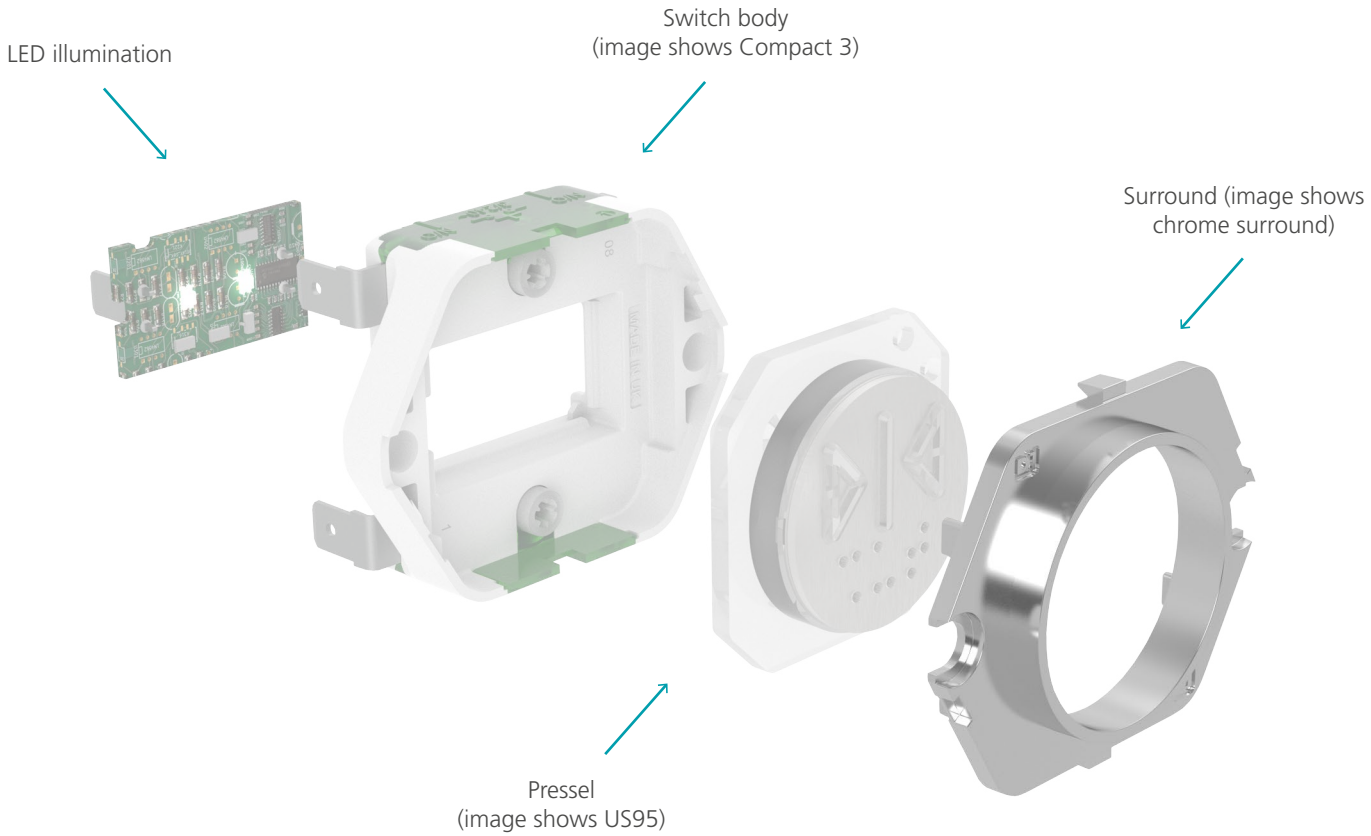

Surround depths

All measurements are the protrusion through the faceplate.

Standard	B44	Exit	Long neck
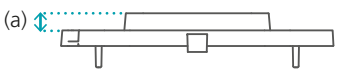	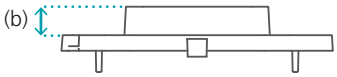	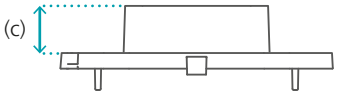	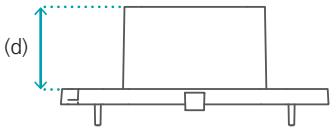
(a) 3mm	(b) 4.6mm	(c) 7.1mm	(d) 12mm, 14mm OR 22mm

Cleaning your Dewhurst pushbutton

Many Dewhurst lift products are made of polycarbonate (Using GE's Lexan® or Bayer's Makrolon®). The US90-15 is highly durable and vandal resistant, but plastic parts can be damaged by aggressive cleaning agents.

Recommended guidance

Clean with a **cotton cloth** and **warm water** before applying the cleaning product.

Use **PH-neutral** or slightly acid cleaning products only (including aromatised ones).

Ethylic alcohol, **isopropyl alcohol** or **ethylene glycol** based multipurpose cleaning products and dish soaps are suggested. Dilute the cleaning product in warm water and apply using a wet cotton cloth.

Grease, glue and paint may be removed with **ethylic alcohol** or **isopropyl alcohol**.

DO NOT USE

- ✗ Abrasive cleaning agents
- ✗ Cleaning agents at high temperatures
- ✗ Antibacterial detergent
- ✗ Sharp tools to remove dirt (chewing gum, glue, etc.)
- ✗ Solvents based with Ketones, benzene, methanol, toluene (methylbenzene or phenyl methane)
- ✗ Alkaline and ammonia based cleaning agents or ones containing citrus

DO NOT leave cleaning agents on the parts for long periods of time: remove immediately after cleaning using a damp cotton cloth.

We operate a policy of continuous product development and reserve the right to change or improve specification without prior notice. E & OE. All information within this document is for guidance only and does not form the basis for contract. The product images and diagrams shown are for illustration purposes only and may not be an exact representation of the latest version of the product. ©2022 Dewhurst. All Rights Reserved.
Unit 9, Hampton Business Park, Feltham, TW13 6DB.

Please consider the environment before you print this data sheet.

Version 28/01/2022